REV	DESCRIPTION	DATE	ECN #	APPD
A	INITIAL RELEASE	00-XXX-19	XXXXX	MM

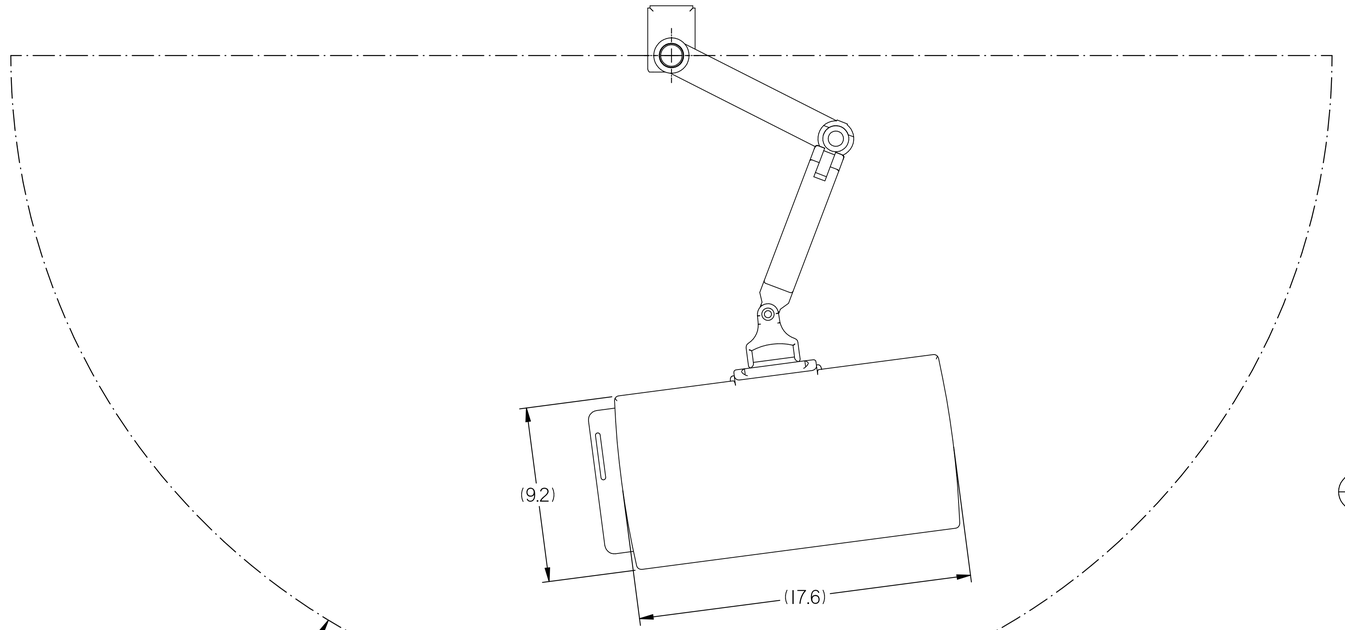

(R 35)
SWING RADIUS
AT FULL EXTENSION

APPROX. 35" SWING RADIUS, 180°
13" OF LIFT

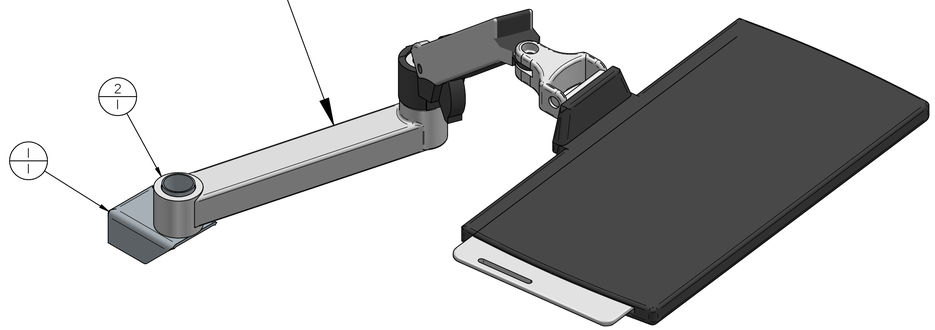

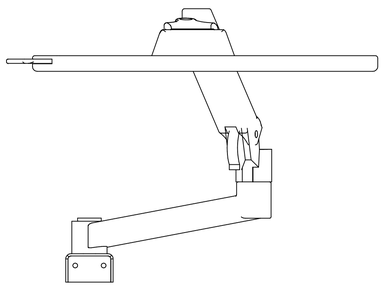

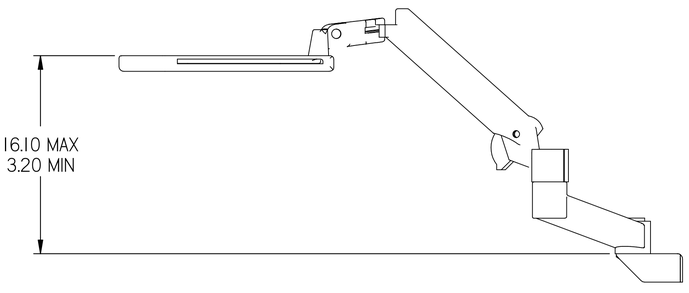

Item #	Qty.	File Name	Title	Material	Rev.
1	1	AX055-C.asm	MAESTRO, HITCH MOUNT		C
2	1	pm0354.asm	LX KEYBOARD ARM WALL MOUNT		

MOPEC LEGAL NOTE
THIS DOCUMENT CONTAINS PROPRIETARY INFORMATION OF MOPEC, AND MAY NOT BE COPIED IN WHOLE OR PART, AND NO USE SHALL BE MADE OF IT OTHER THAN FOR WHICH IT HAS BEEN SUBMITTED WITHOUT THE WRITTEN PERMISSION OF A MOPEC. MANAGER

MOPEC 2026

UNLESS OTHERWISE SPECIFIED:
ALL DIMENSIONS IN INCHES
TOLERANCES
0.0 ± 0.1 in
0.00 ± 0.05 in
0.000 ± 0.010 in
0.0000 ± 0.0010 in
ANGLES ±0.5°

BREAK ALL CORNERS 0.063 X 45°
ALL FILLET RADII R0.063 /0.125in
INSPECT OVAL DIMENSIONS

MOPEC GROUP
Mopec MORTECH MANUFACTURING

DRAWN TO 3RD ANGLE PROJECTION

DRAWN BY: danderson
DATE: 10/22/2026
CHECKED BY: bdevins
DATE: 10/22/2026
APPROVED BY: M.McCLAIN
DATE: 10/22/2026

PART NUMBER: AX115-A
DESCRIPTION: MAESTRO, HITCH MOUNT, KEYBOARD
SIZE: A2 FILE NAME: AX115-A.dft REV: A
SCALE: 1:4 DO NOT SCALE IF IN DOUBT ASK SHEET 1 OF 1

AX115-A.dft