REV	DESCRIPTION	DATE	ECN #	APPR
A	INITIAL RELEASE	00-XXX-19	XXXXX	MM

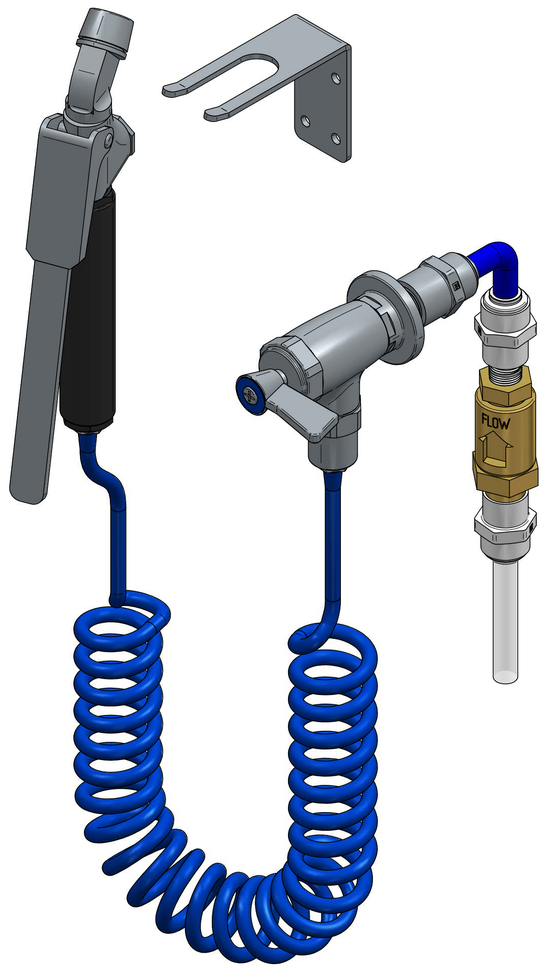

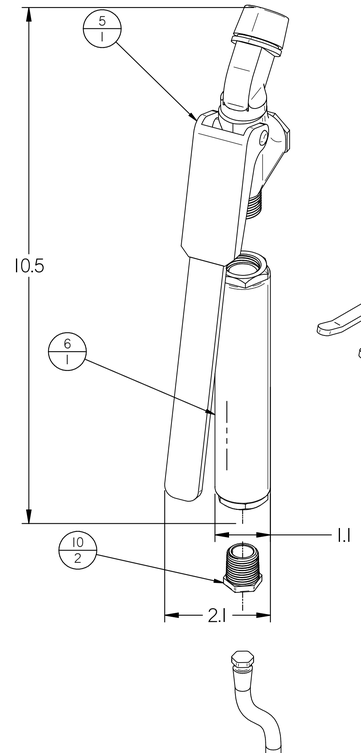

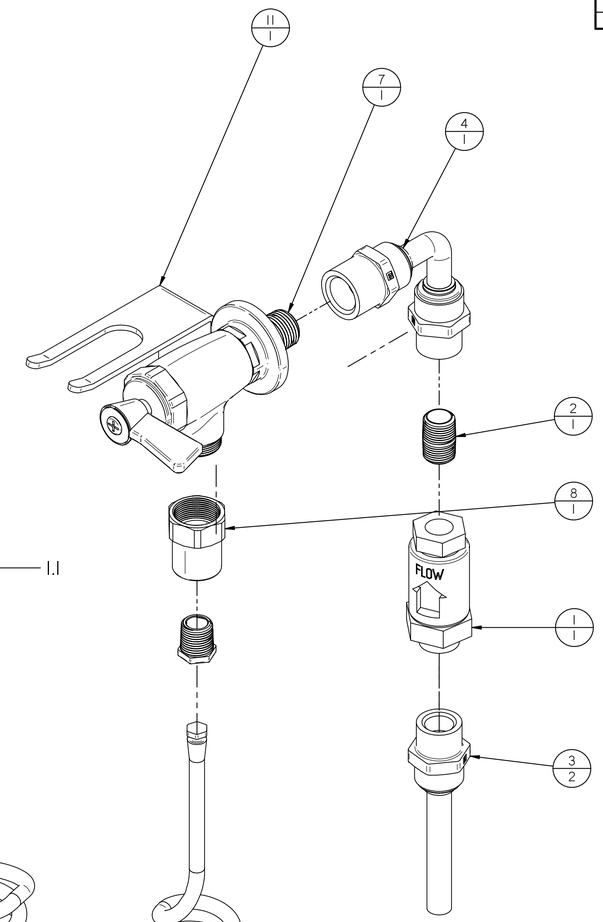

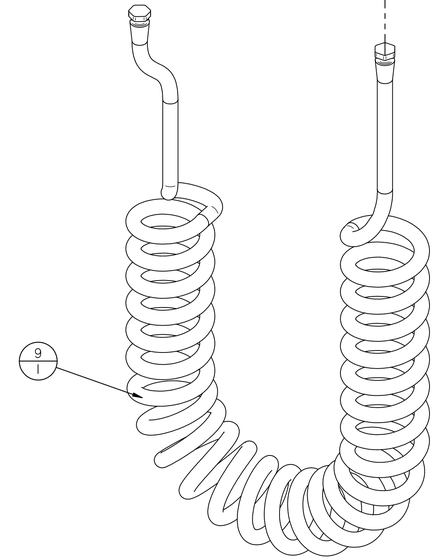

Item #	Qty.	File Name	Title	Material	Rev.
1	1	PP0199.par	FITTING BRASS B/F PREVENTER 3/8" FNPT	PURCHASED PART (SEE PART DESCRIPTION)	A
2	1	PP0572.par	NIPPLE 3/8 NPT 1" LENGTH	PURCHASED PART (SEE PART DESCRIPTION)	A
3	2	PP1040.par	FITTING, FEMALE 3/8 NPT, TUBE 1/2	PURCHASED PART (SEE PART DESCRIPTION)	A
4	1	PP1041.par	FITTING, FEMALE 1/2 NPT, TUBE 1/2	PURCHASED PART (SEE PART DESCRIPTION)	A
5	1	PP1235.par	VALVE, GLASS FILLER- 3/4"	PURCHASED PART (SEE PART DESCRIPTION)	A
6	1	PP1266.par	HANDLE, INSULATED- 3/4-14	PURCHASED PART (SEE PART DESCRIPTION)	A
7	1	PP1267.par	VALVE, SINGLE WALL CONTROL- 3/8" NPT FEMALE X 1/2" SWIVEL OUTLET	PURCHASED PART (SEE PART DESCRIPTION)	A
8	1	PP1268.par	ADAPTER, 3/8" FEMALE, SWIVEL TO RIGID	PURCHASED PART (SEE PART DESCRIPTION)	A
9	1	PP1371.par	FLEXCOIL HOSE, 1/4" ID x 3/8" OD, 10' L, 1/4" MALE NPT	PURCHASED PART (SEE PART DESCRIPTION)	
10	2	PP1375.par	BUSHING ADAPTER, 3/8 MALE X 1/4 FEMALE	PURCHASED PART (SEE PART DESCRIPTION)	A
11	1	S8316-A.psm	SPRAY HOSE BRACKET	SHT, SS, 11 GA, 304	A

MOPEC LEGAL NOTE
THIS DOCUMENT CONTAINS PROPRIETARY INFORMATION OF MOPEC, AND MAY NOT BE COPIED IN WHOLE OR PART, AND NO USE SHALL BE MADE OF IT OTHER THAN FOR WHICH IT HAS BEEN SUBMITTED WITHOUT THE WRITTEN PERMISSION OF A MOPEC MANAGER
MOPEC 2026

UNLESS OTHERWISE SPECIFIED:
ALL DIMENSIONS IN INCHES
TOLERANCES
0.0 ± 0.1 in
0.00 ± 0.05 in
0.000 ± 0.010 in
0.0000 ± 0.0010 in
ANGLES ±0.5°
BREAK ALL CORNERS 0.063 X 45°
ALL FILLET RADII R0.063 /0.125in
INSPECT OVAL DIMENSIONS

MATERIAL:

MOPEC GROUP
Mopec MORTECH MANUFACTURING
DRAWN TO 3RD ANGLE PROJECTION

DRAWN BY: danderson
DATE: 8/4/2026
CHECKED BY: ---
DATE: 8/4/2026
APPROVED BY: M.McCLAIN
DATE: 8/4/2026

PART NUMBER: 0A-506-A
DESCRIPTION: SPRAY HOSE ASSEMBLY, BACKFLOW PREVENTER, RECOIL HOSE
SIZE: A2
FILE NAME: 0A-506-A.dft
REV: A
SCALE: 1:1.54
DO NOT SCALE IF IN DOUBT ASK
SHEET 1 OF 1

0A-506-A.dft