NOTES: UNLESS OTHERWISE SPECIFIED

1. APPLICABLE STANDARDS AND SPECIFICATIONS;
   ANSI Y14.5M, DIMENSIONS AND TOLERANCES
   ANSI Y1.1, ABBREVIATIONS

REVISIONS				
REV.	DCN#	DESCRIPTION	DATE	CHANGED/APPROVED
A	-	PRODUCTION RELEASE	02/21/11	PV/GJ
B	1077	IMPLEMENTATION OF NEW CASTER	2/19/15	EZ/RR

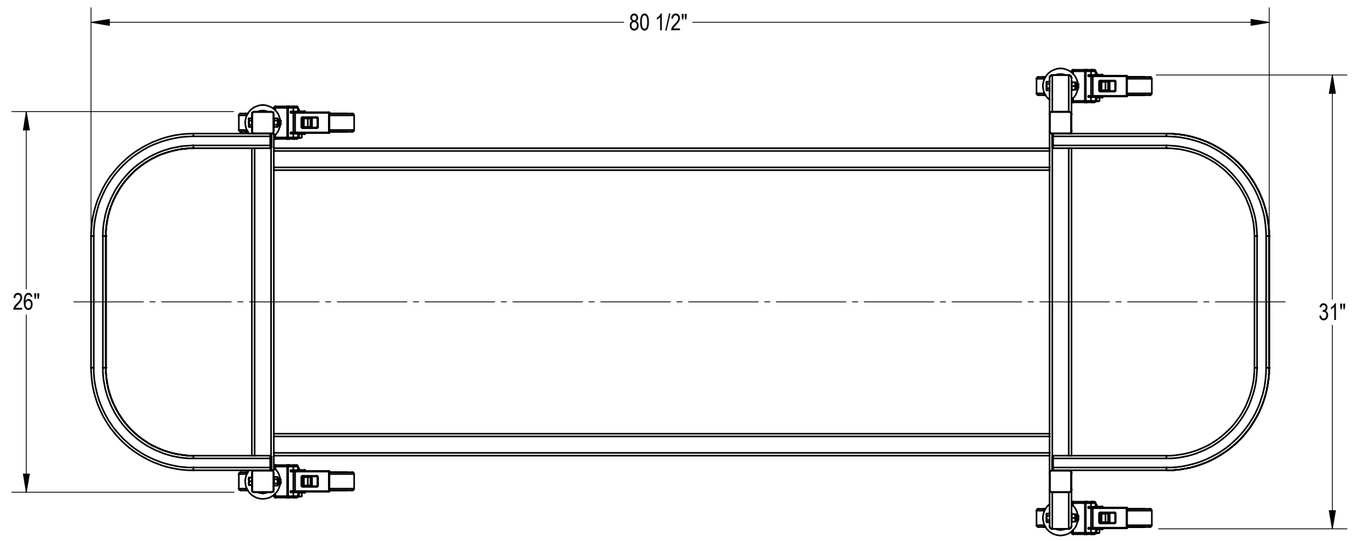

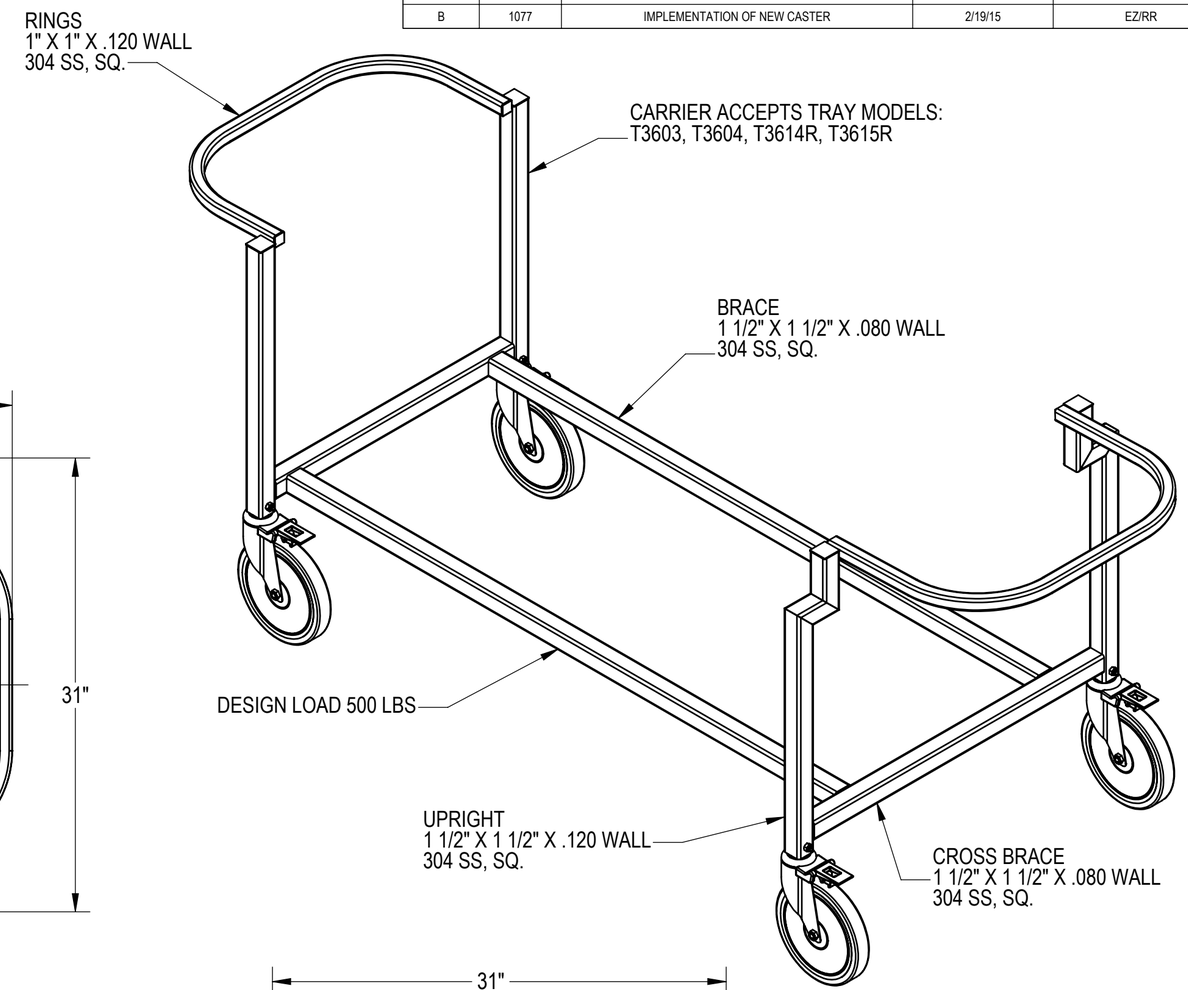

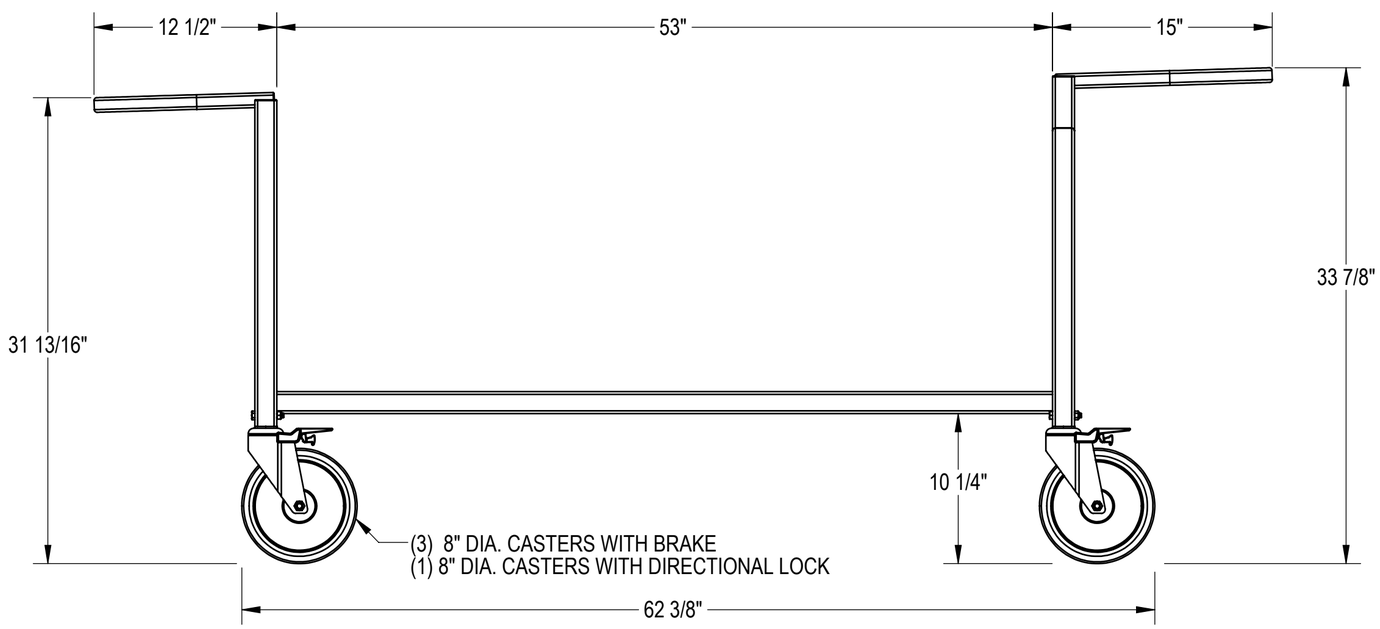

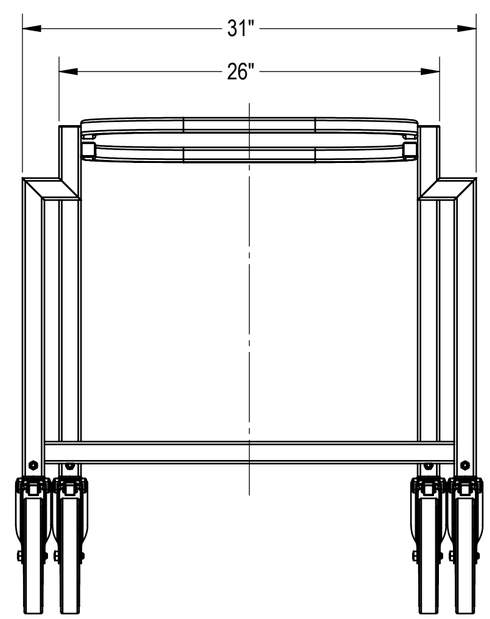

CUSTOMER	APPROVAL	
PROJECT	SIGNATURE	DATE

PROPRIETARY

THIS DOCUMENT AND THE DATE DISCLOSED HEREIN AND HEREWITH IS NOT TO BE REPRODUCED, USED, OR OTHERWISE DISCLOSED IN WHOLE OR IN PART TO ANYONE WITHOUT WRITTEN AUTHORIZATION FROM MORTECH MFG.

DO NOT SCALE DRAWING

MATERIAL: 304 STAINLESS STEEL

FINISH: GRAINED

APPROVALS		DATE
DRAWN BY	PETE V.	01/18/11
CHECKED BY	RICK R.	01/20/11
APPROVED BY	GINO J.	01/21/11

MOPEC GROUP
Mopec MORTECH MANUFACTURING

411 North Aerojet Avenue
Azusa, CA 91702
tel: (800) 410-0100 (626) 334-1471
fax: (626) 334-1704
www.mortechmfg.com

TITLE

MODEL 600014
C-ARM ACCESSIBLE AUTOPSY CARRIER

SIZE	DWG NO.	REV
C	600014AP	B

SCALE 1:8 | NEXT ASSY. | SHEET 1 OF 1