REV	DESCRIPTION	DATE	ECN #	APPR
A	INITIAL RELEASE	00-XXX-19	XXXXX	MM

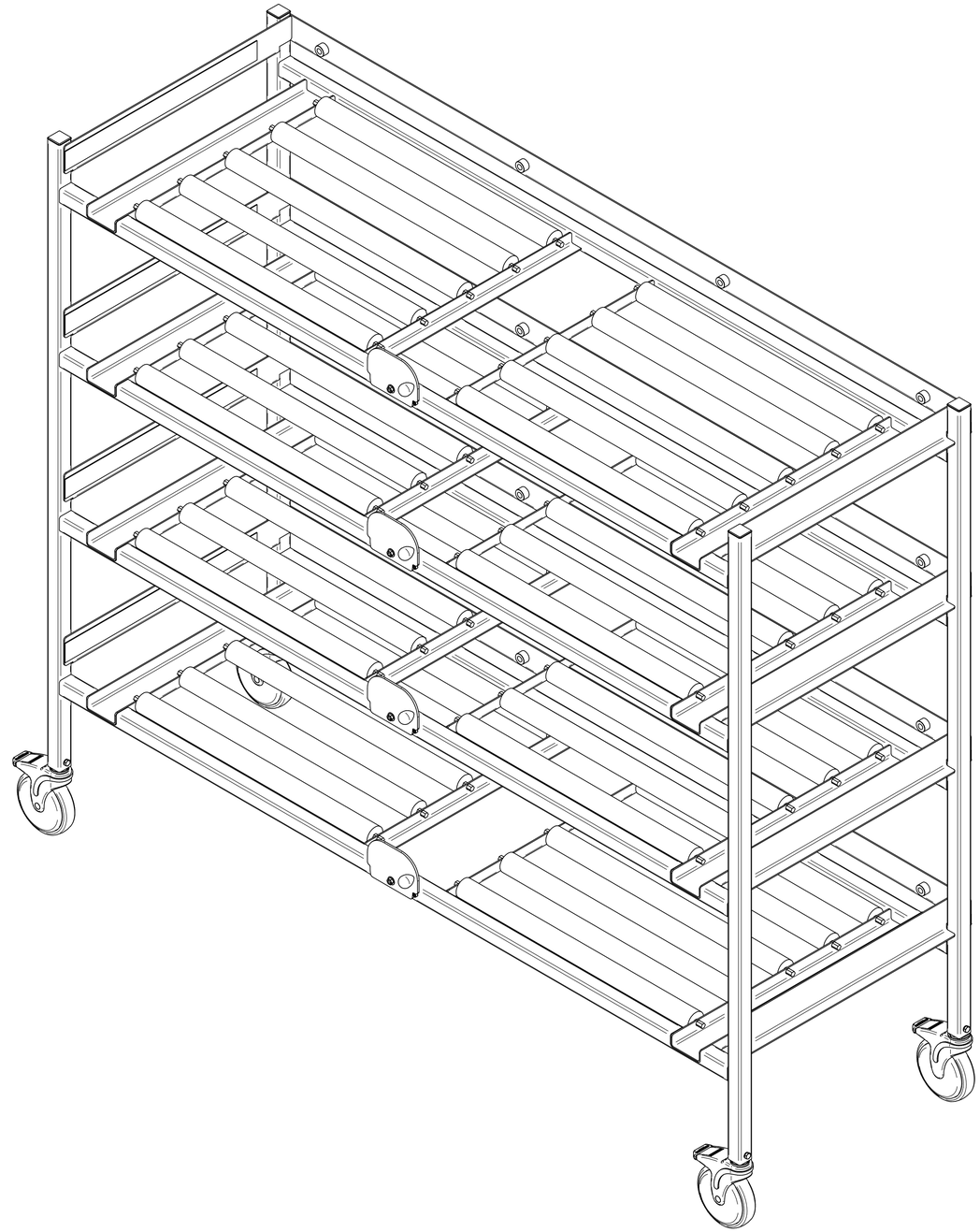

THIS DOCUMENT CONTAINS PROPRIETARY INFORMATION OF MOPEC, AND MAY NOT BE COPIED IN WHOLE OR PART, AND NO USE SHALL BE MADE OF IT OTHER THAN FOR WHICH IT HAS BEEN SUBMITTED WITHOUT THE WRITTEN PERMISSION OF A MOPEC. MANAGER

MOPEC 2025

UNLESS OTHERWISE SPECIFIED:
ALL DIMENSIONS IN INCHES

TOLERANCES		
	0.0	± 0.1 in
	0.00	± 0.05 in
	0.000	± 0.010 in
	0.0000	± 0.0010 in
	ANGLES	±0.5°

BREAK ALL CORNERS 0.063 X 45°
ALL FILLET RADII R0.063 /0.125in
INSPECT OVAL DIMENSIONS

MATERIAL:

MATERIAL USAGE

FINISH

MOPEC GROUP
Mopec ELEVATING PATHOLOGY MORTECH MANUFACTURING

DRAWN TO 3RD ANGLE PROJECTION

DRAWN BY: jrudolph
DATE: 11/3/2022
CHECKED BY: ---
DATE: 11/3/2022
APPROVED BY: MMcCLAIN
DATE: 11/3/2022

PART NUMBER: IW27401-A
DESCRIPTION: IW27401 SIDE LAODING RACK ASSY.
SIZE: A2
FILE NAME: IW27401-A.dft
REV: A
SCALE: 1:6
DO NOT SCALE IF IN DOUBT ASK
SHEET 1 OF 2

IW27401-A.dft

REV	DESCRIPTION	DATE	ECN #	APPR
A	INITIAL RELEASE	00-XXX-19	XXXXX	MM

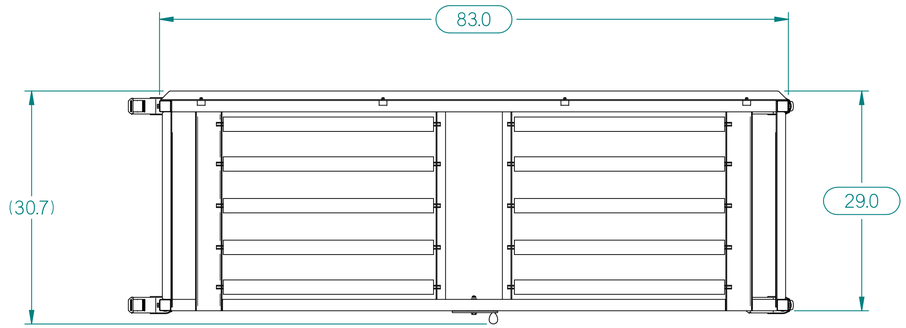

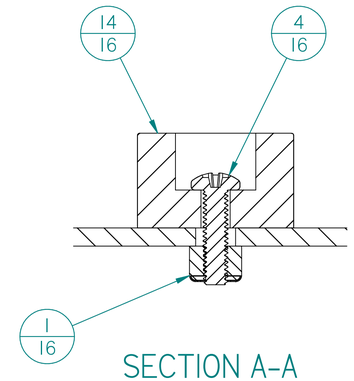

SECTION A-A

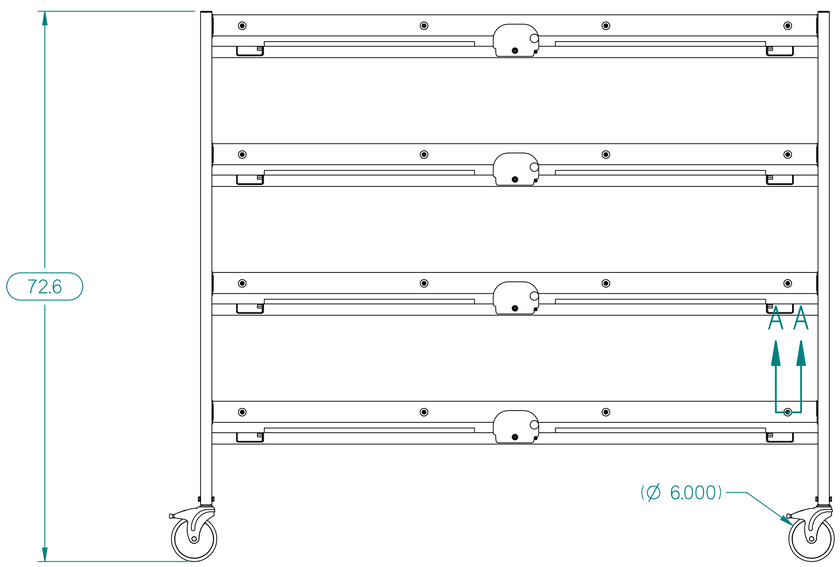

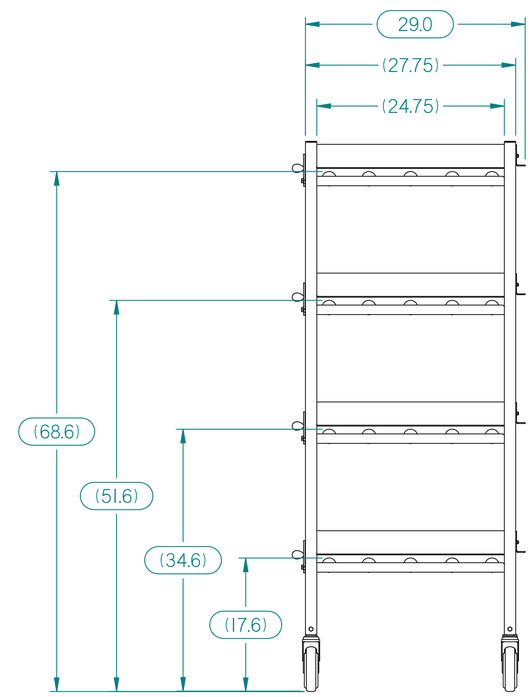

TRAYS SHOWN FOR REFERENCE ONLY

THIS DOCUMENT CONTAINS PROPRIETARY INFORMATION OF MOPEC, AND MAY NOT BE COPIED IN WHOLE OR PART, AND NO USE SHALL BE MADE OF IT OTHER THAN FOR WHICH IT HAS BEEN SUBMITTED WITHOUT THE WRITTEN PERMISSION OF A MOPEC. MANAGER

MOPEC 2025

UNLESS OTHERWISE SPECIFIED
ALL DIMENSIONS IN INCHES
TOLERANCES
0.0 ± 0.1 in
0.00 ± 0.05 in
0.000 ± 0.010 in
0.0000 ± 0.0010 in
ANGLES ±0.5°

BREAK ALL CORNERS 0.063 X 45°
ALL FILLET RADII R0.063 /0.125in
INSPECT OVAL DIMENSIONS

MATERIAL:
MATERIAL USAGE
FINISH

MOPEC GROUP
Mopec MORTECH MANUFACTURING

DRAWN TO 3RD ANGLE PROJECTION

DRAWN BY: jrudolph
DATE: 11/3/2022
CHECKED BY: ---
DATE: 11/3/2022
APPROVED BY: MMcCLAIN
DATE: 11/3/2022

PART NUMBER: IW27401-A
DESCRIPTION: IW27401 SIDE LAODING RACK ASSY.
SIZE: A2
FILE NAME: IW27401-A.dft
REV: A
SCALE: 1:10
DO NOT SCALE IF IN DOUBT ASK
SHEET 2 OF 2

IW27401-A.dft