REV	DESCRIPTION	DATE	ECN #	APPR
A	INITIAL RELEASE	00-XXX-19	XXXXX	MM
B	COMPONENTS UPDATED	5-JAN-17	933	JB

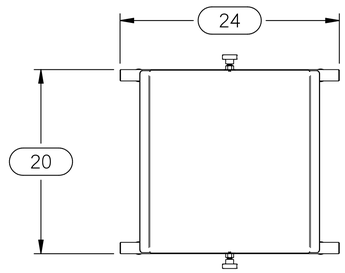

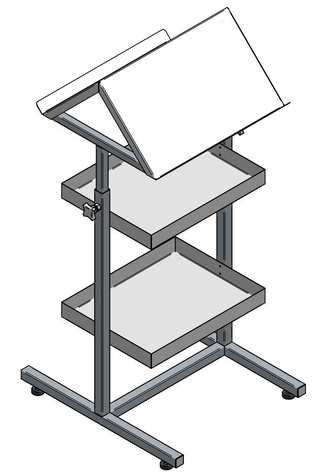

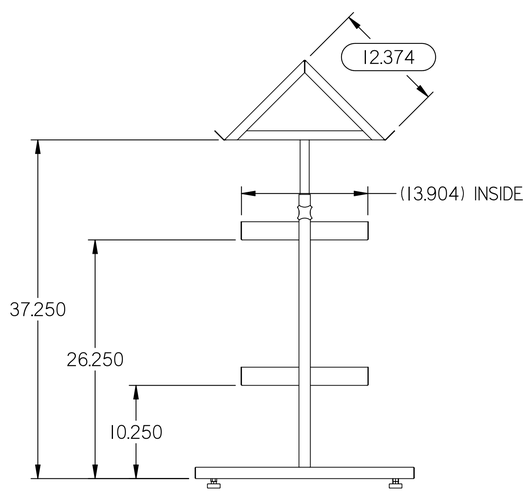

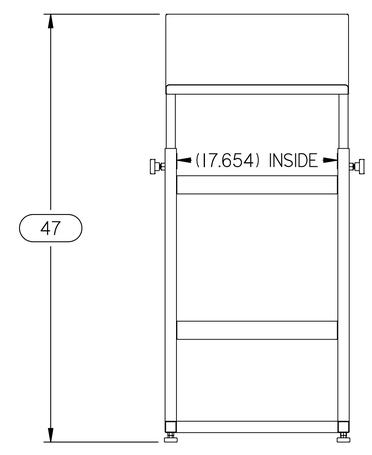

THIS DOCUMENT CONTAINS PROPRIETARY INFORMATION OF MOPEC, AND MAY NOT BE COPIED IN WHOLE OR PART, AND NO USE SHALL BE MADE OF IT OTHER THAN FOR WHICH IT HAS BEEN SUBMITTED WITHOUT THE WRITTEN PERMISSION OF A MOPEC. MANAGER

MOPEC 2024

UNLESS OTHERWISE SPECIFIED
ALL DIMENSIONS IN INCHES
TOLERANCES
0.0 ± 0.1 in
0.00 ± 0.05 in
0.000 ± 0.010 in
0.0000 ± 0.0010 in
ANGLES ±0.5°

BREAK ALL CORNERS 0.063 X 45°
ALL FILLET RADII R0.063 /0.125in
INSPECT OVAL DIMENSIONS

MOPEC GROUP
Mopec MORTECH MANUFACTURING

DRAWN TO 3RD ANGLE PROJECTION

DRAWN BY: B. LAY DATE: 1/29/2020
CHECKED BY: --- DATE: 1/29/2020
APPROVED BY: M.McCLAIN DATE: 1/29/2020

PART NUMBER: BN200-B
DESCRIPTION: STATIONARY BOOK STAND
SIZE: A2 FILE NAME: BN200-B.dft REV: B
SCALE: 1:1 DO NOT SCALE IF IN DOUBT ASK
SHEET 1 OF 2

BN200-B.dft

REV	DESCRIPTION	DATE	ECN #	APPR
A	INITIAL RELEASE	00-XXX-19	XXXXX	MM
B	COMPONENTS UPDATED	5-JAN-17	933	JB

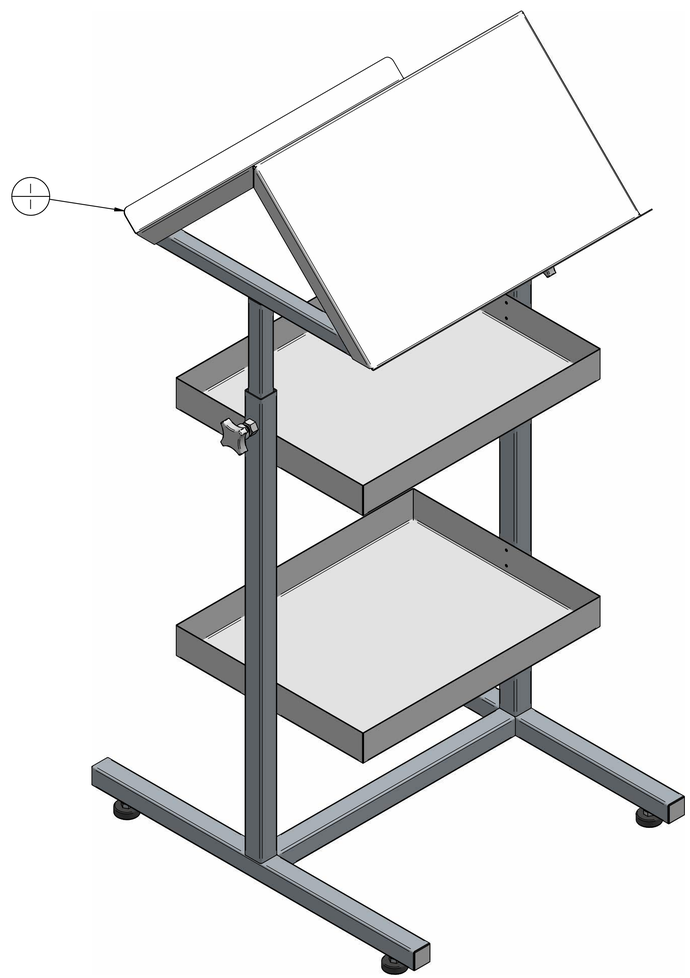

Item Number	Quantity	File Name	Title
1	1	S5199-B.asm	STATIONARY BOOK HOLDER ASSEMBLY

THIS DOCUMENT CONTAINS PROPRIETARY INFORMATION OF MOPEC, AND MAY NOT BE COPIED IN WHOLE OR PART, AND NO USE SHALL BE MADE OF IT OTHER THAN FOR WHICH IT HAS BEEN SUBMITTED WITHOUT THE WRITTEN PERMISSION OF A MOPEC. MANAGER

MOPEC 2024

UNLESS OTHERWISE SPECIFIED:
ALL DIMENSIONS IN INCHES

TOLERANCES	
0.0	± 0.1 in
0.00	± 0.05 in
0.000	± 0.010 in
0.0000	± 0.0010 in
ANGLES	±0.5°

BREAK ALL CORNERS 0.063 X 45°
ALL FILLET RADII R0.063 /0.125in
INSPECT OVAL DIMENSIONS

MOPEC GROUP
Mopec MORTECH MANUFACTURING

DRAWN TO 3RD ANGLE PROJECTION

DRAWN BY: B. LAY
DATE: 1/29/2020
CHECKED BY: ---
DATE: 1/29/2020
APPROVED BY: M.McCLAIN
DATE: 1/29/2020

PART NUMBER: BN200-B
DESCRIPTION: STATIONARY BOOK STAND
SIZE: A2 FILE NAME: BN200-B.dft REV: B
SCALE: 1:4 DO NOT SCALE IF IN DOUBT ASK SHEET 2 OF 2

BN200-B.dft