REV	DESCRIPTION	DATE	ECN #	APPR
A	INITIAL RELEASE	00-XXX-19	XXXXX	MM

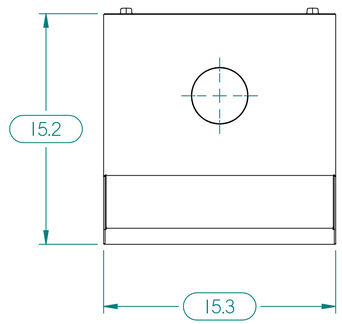

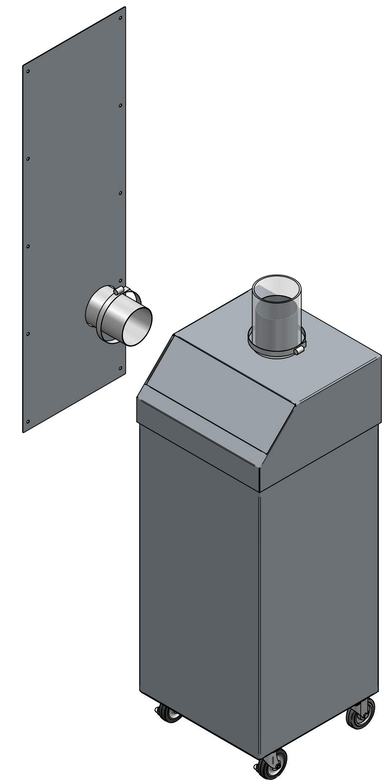

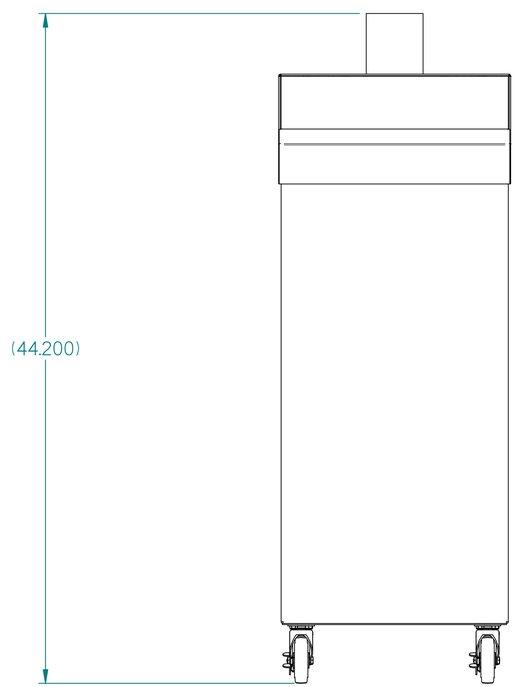

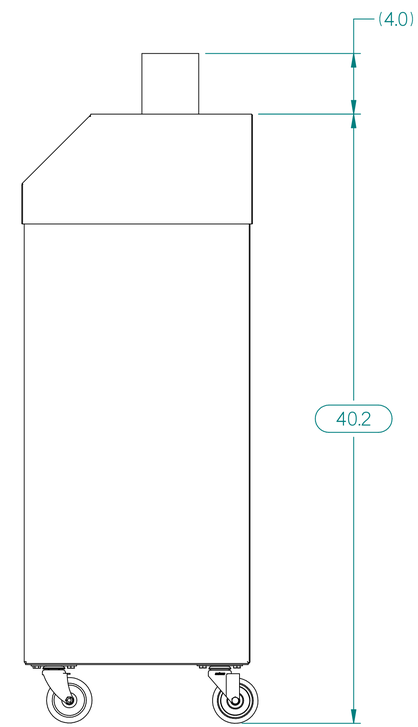

THIS DOCUMENT CONTAINS PROPRIETARY INFORMATION OF MOPEC, AND MAY NOT BE COPIED IN WHOLE OR PART, AND NO USE SHALL BE MADE OF IT OTHER THAN FOR WHICH IT HAS BEEN SUBMITTED WITHOUT THE WRITTEN PERMISSION OF A MOPEC. MANAGER

MOPEC 2024

UNLESS OTHERWISE SPECIFIED:
ALL DIMENSIONS IN INCHES
TOLERANCES
0.0 ± 0.1 in
0.00 ± 0.05 in
0.000 ± 0.010 in
0.0000 ± 0.0010 in
ANGLES ±0.5°

BREAK ALL CORNERS 0.063 X 45°
ALL FILLET RADII R0.063 /0.125in
INSPECT OVAL DIMENSIONS

MOPEC GROUP
Mopec MORTECH MANUFACTURING

DRAWN TO 3RD ANGLE PROJECTION

DRAWN BY: A.SALAME
DATE: 1/29/2020
CHECKED BY: ---
DATE: 1/29/2020
APPROVED BY: M.McCLAIN
DATE: 1/29/2020

PART NUMBER: AX060R-A
DESCRIPTION: MAESTRO, VENTED TRASH CAN ON WHEELS, RIGHT
SIZE: A2
FILE NAME: AX060R-A.dft
REV: A
SCALE: 1:5
DO NOT SCALE IF IN DOUBT ASK
SHEET 1 OF 2

AX060R-A.dft

REV	DESCRIPTION	DATE	ECN #	APPR
A	INITIAL RELEASE	00-XXX-19	XXXXX	MM

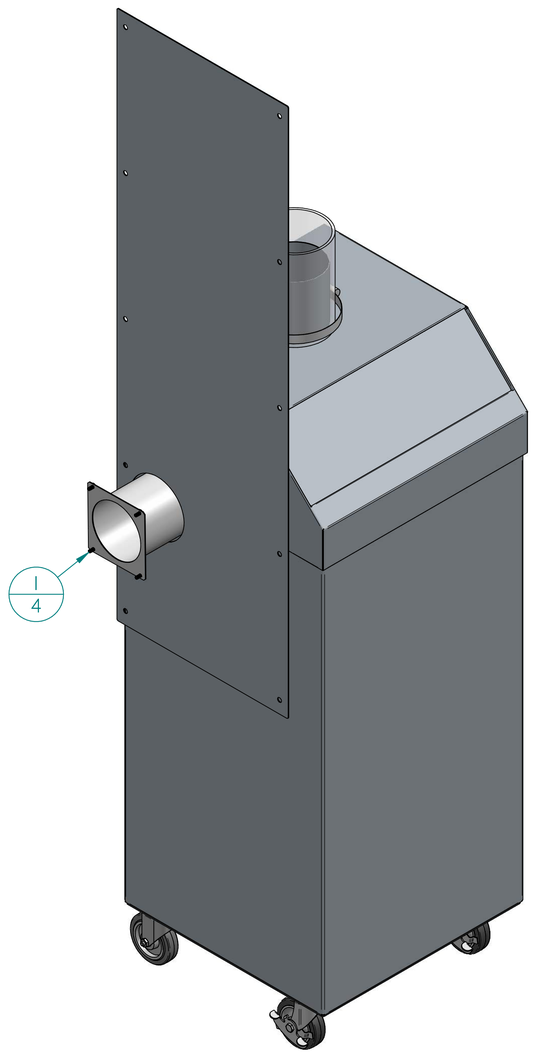

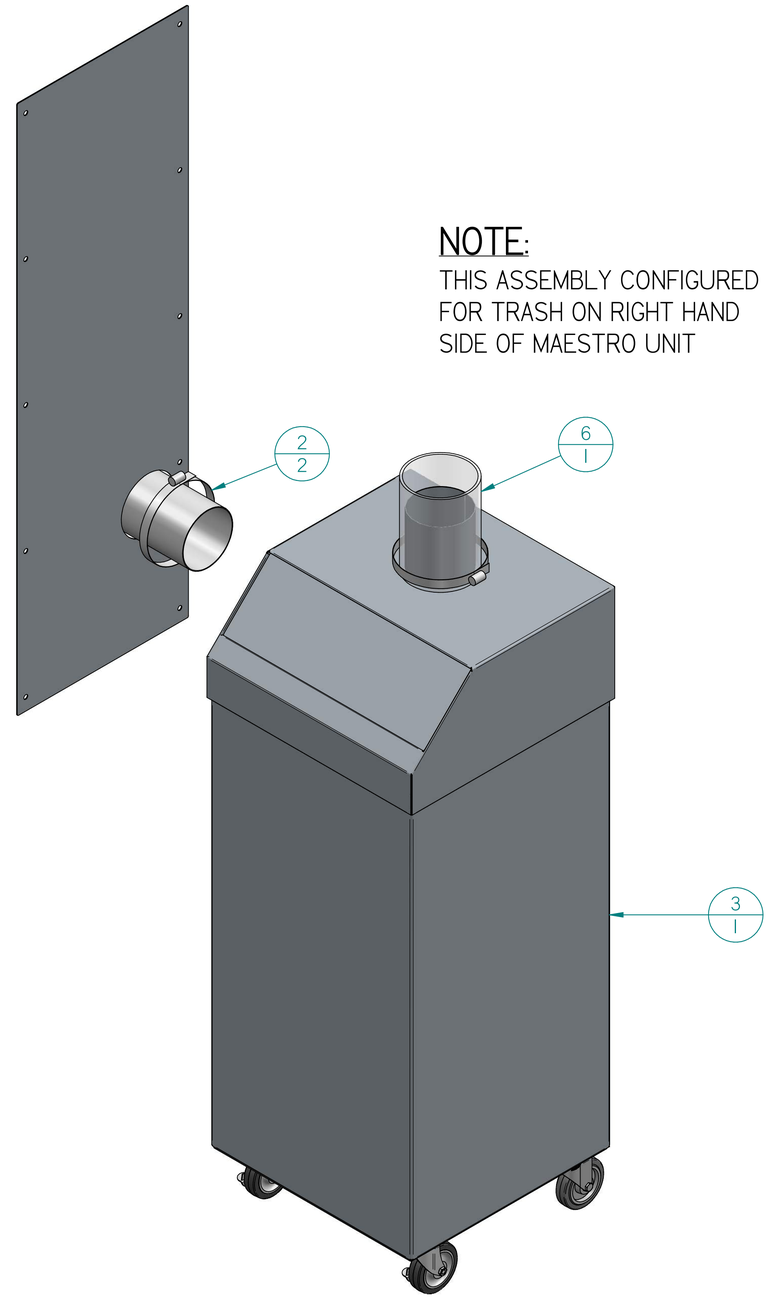

NOTE:

THIS ASSEMBLY CONFIGURED FOR TRASH ON RIGHT HAND SIDE OF MAESTRO UNIT

Item #	Qty.	File Name	Title	Material	Rev.
1	4	PB0038	SCREW - SS, 8-32 x 3/8"L, TRUSS PHILLIPS	McMASTER-CARR # 91770A192	
2	2	PB0257	HOSE CLAMP 2" TO 5"		A
3	1	S2550-A	MB050 LARGE VENTILATED TRASH CAN ASM.		A
4*	1	S6838-A	AX060 DUCT STUB WELDMENT		A
5*	1	S6841-B		SHT, SS, 18 GA, 304	B
6	1	S6842-A	DUCT, 4" FLEXIBLE	PVC FLEX DUCT, 4" I.D. x 4-5/16" O.D.	A

THIS DOCUMENT CONTAINS PROPRIETARY INFORMATION OF MOPEC, AND MAY NOT BE COPIED IN WHOLE OR PART, AND NO USE SHALL BE MADE OF IT OTHER THAN FOR WHICH IT HAS BEEN SUBMITTED WITHOUT THE WRITTEN PERMISSION OF A MOPEC. MANAGER

MOPEC 2024

UNLESS OTHERWISE SPECIFIED:
ALL DIMENSIONS IN INCHES
TOLERANCES
0.0 ± 0.1 in
0.00 ± 0.05 in
0.000 ± 0.010 in
0.0000 ± 0.0010 in
ANGLES ±0.5°

BREAK ALL CORNERS 0.063 X 45°
ALL FILLET RADII R0.063 /0.125in
INSPECT OVAL DIMENSIONS

MOPEC GROUP
Mopec MORTECH MANUFACTURING

DRAWN TO 3RD ANGLE PROJECTION

DRAWN BY: A.SALAME
DATE: 1/29/2020
CHECKED BY: ---
DATE: 1/29/2020
APPROVED BY: M.McCLAIN
DATE: 1/29/2020

PART NUMBER: AX060R-A
DESCRIPTION: MAESTRO, VENTED TRASH CAN ON WHEELS, RIGHT
SIZE: A2
FILE NAME: AX060R-A.dft
REV: A
SCALE: 1:4
DO NOT SCALE IF IN DOUBT ASK
SHEET 2 OF 2

AX060R-A.dft